BIG
BIG DAISHOWA

Precision Electronic Level

LEVEL MASTER WIRELESS

LVM-WL

Operation manual

Thank you for using BIG Level Master Wireless(LVM-WL).
Please handle it as a measuring instrument and utilize it for long time.
Please be sure to read this manual before using the device and also keep it in a location where all the operators may consult it in case of necessity.

INDEX

BIG DAISHOWA SEIKI CO., LTD.

1. SPECIFICATIONS

Specifications		
Model		LVM-WL
Minimum readable value		0.01mm／1m
Wireless system		2.4GHz
Power supply	Body	Alkaline dry battery LR03 (AAA) x4
	Receiver	
Battery life	Body	30 hours
	Receiver	
Auto-power OFF	Body	30 minutes after power is turned on
	Receiver	
Operating temperature		0℃ ~ 40℃ (Recommended 20℃ ±5℃)
Dimentions	Body	φ109mm×H143mm
	Receiver	H143×W81×D43mm
Weight	Body	0.99kg
	Receiver	0.28kg
Included items		Operation manual Aluminum storage box Alkaline dry battery : LR03 (AAA) x4

●LED indicators

LOW mode

Blinking LED (red) : Inclination exceeding 0.8mm/1m
Continuous LED (red): Inclination of 0.8mm/1m or less
Continuous LED (orange): Inclination of 0.6mm/1m or less
Continuous LED(yellow) : Inclination of 0.4mm/1m or less
Continuous LED(green) : Inclination of 0.2mm/1m or less
Continuous LED(blue) : Inclination of 0.1mm/1m or less

HIGH mode

Blinking LED (red) : Inclination exceeding 0.08mm/1m
Continuous LED (red) : Inclination of 0.08mm/1m or less
Continuous LED (orange) : Inclination of 0.06mm/1m or less
Continuous LED(yellow) : Inclination of 0.04mm or less
Continuous LED(green) : Inclination of 0.02mm/1m or less
Continuous LED(blue) : Inclination of 0.01mm/1m or less

2. NAMES OF PARTS AND FUNCTIONS

●Body

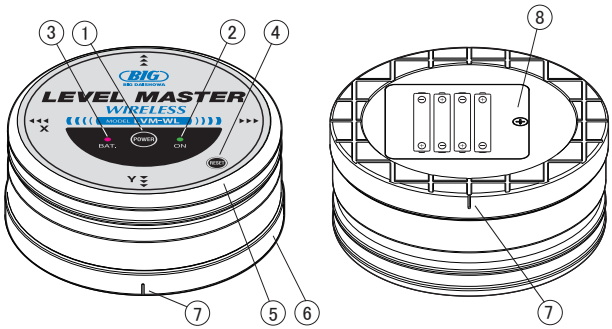

①POWER switch **ON ←→ OFF**
Push the POWER swtich to turn ON the power.
Push it again to turn OFF the power.

②Power LED
LED (green) is lighted during the power is ON.

③Battery alarm LED
LED (orange) flickers to inform battery exchange time when voltage falls below the prescribed value.

④RESET switch
ush to reset the measurement in case abnormality occurs.

⑤Body base ⑥Body case

⑦Line markers
They are used for determining the direction of the X and Y axes.

⑧Batteries box
It is the location where the batteries are installed (LR03: AAA x4).

●Receiver

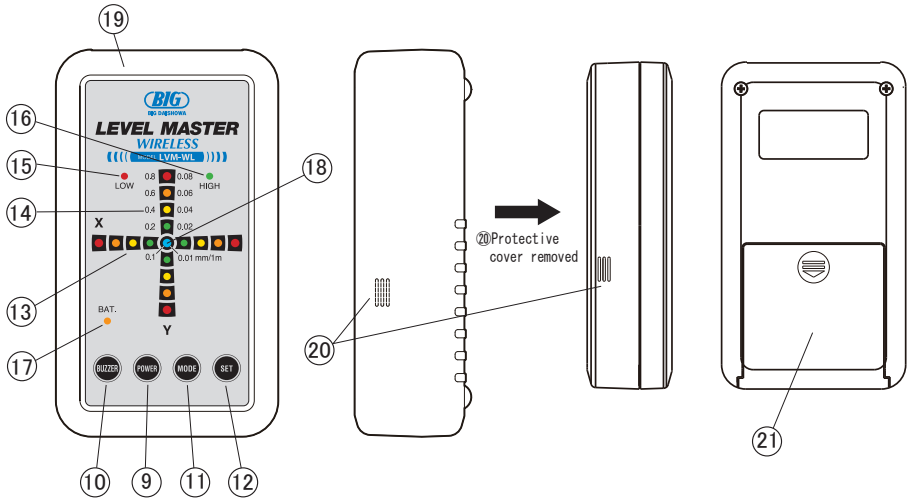

⑨POWER switch ON ⟷ OFF
Push the POWER swtich to turn ON the receiver, and the LED level indicator is lighted and measurement becomes ready.
Push it again to turn OFF the power.

⑪MODE switch HIGH ⟷ LOW
Push the MODE switch to change the precision level. The "HIGH" mode is selected when turning ON the device.

⑬LED level indicators (X-axis)
They indicate the level status.
The inclination is between 0.8mm/1m and 0.1mm/1m in case of the LOW mode.
The inclination is between 0.08mm/1m and 0.01mm/1m in case of the HIGH mode.

⑮Mode LED
The LED (red) turns on when the LOW mode is selected.

⑰Battery alarm LED
LED (orange) flickers to inform battery xchange time when voltage falls below the prescribed value.

⑲Receiver case

㉑ Batteries box
It is the location where the batteries are installed (LR03: AAA x4).

⑩Buzzer sound ON ⟷ OFF switch
Push it to turn ON the buzzer. Buzzer sounds when leveled within 0.1 (LOW mode) or 0.01 (HIGH mode).
Push it again to turn OFF the buzzer.

⑫SET switch
This switch is used to execute the zeroadjustment.

⑭LED level indicators (Y-axis)
They indicate the level status.
The inclination is between 0.8mm/1m and 0.1mm/1m in case of the LOW mode.
The inclination is between 0.08mm/1m and 0.01mm/1m in case of the HIGH mode.

⑯Mode LED
The LED (green) turns on when the HIGH mode is selected.

⑱LED level indicator (Central position)
The LED (blue) turns on when the level status reaches the central position.
The inclination is 0.1mm/1m or less in case of the LOW mode.
The inclination is 0.01mm/1m or less in case of the HIGH mode.

⑳Buzzer sound
Outlet of buzzer sound.

3. HOW TO INSTALL THE BATTERIES

●Body

①Loose the screw of the cover of the batteries box.

②Insert the 4 batteries included (LR03: AAA) in the base of the batteries box as indicated on the figure on the right.

③After have installed the batteries, insert the projecting part of the cover into the recess of the batteries box. Then, secure the cover by tightening the screw.

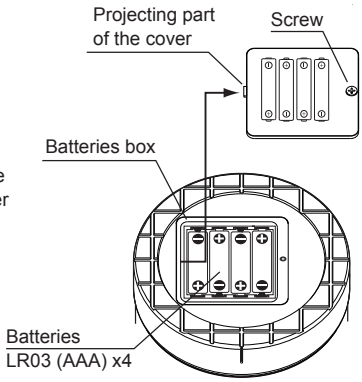

Caution

Always check the polarity of the batteries. If the batteries are inserted with the polarity inverted, the device may not work and the internal electric circuit may get damaged making the device not utilizable.

●Receiver

①Remove the protective cover.

②Slide to remove the cover of the battery box.

③Insert 4 batteries (LR03: AAA) as indicated in the battery box.

④Slide and fit the cover.

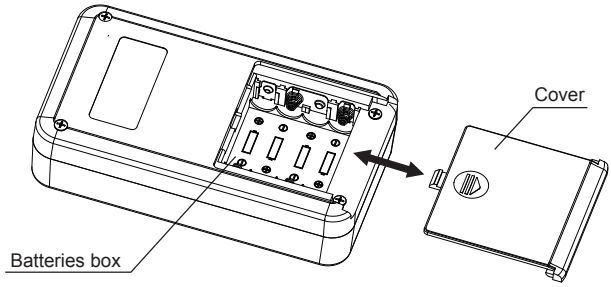

Caution

Always check the polarity of the batteries. If the batteries are inserted with the polarity inverted, the device may not work and the internal electric circuit may get damaged making the device not utilizable.

4. BEFORE USING THE DEVICE

4-1. Environmental settings

If there is a difference in the temperature between the storage location and the utilization location, leave the device for a certain amount of time in the utilization location to perform the average environmental settings (temperature, humidity).
(Example: If the difference in the temperature is 10℃, leave the device for 15~20 minutes.)

4-2. How to execute the zero adjustment

Caution

When the Level Master Wireless(Body/Receiver) is turned on, depending on the utilization environment and on the status of the reference surface measured, the level position may not be always the "0" position (continuous blue LED). Execute every time the reference settings by means of zero adjustment in accord with the utilization environment.

①Position the Body on the reference surface. When placing the device, remove oil and dirt from its base and also remove notches, oil and dirt from the reference surface of the precision plate.

②Use as reference the line markers on the base of the Body and mark 4 points in the X and Y directions on the reference surface.

③Push the POWER switch to turn ON the power. (Body/Receiver)

④Execute the zero adjustment and the levelling checks following the procedures below.

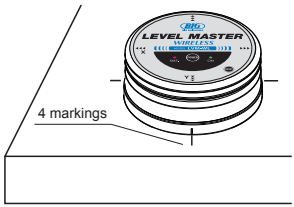

How to check the levelling value in LOW mode

Case 1

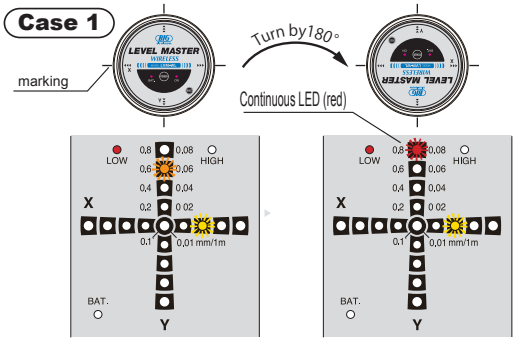

①The levelling value of the X and Y axes is within 0.8 after switching to the LOW mode.

②The levelling value of both axes is within 0.8 after turning the device by 180° .

Go to P5 →How to execute the zero adjustment in LOW mode

Case 2

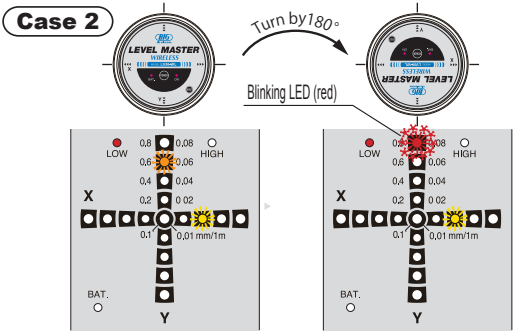

①The levelling value of the X and Y axes is within 0.8 after switching to the LOW mode.

②The levelling value of one of the axes exceeds 0.8 after turning the device by 180° .

③Adjust the level of the reference surface in order to obtain a levelling value within 0.8 for both axes.

Go to P5 →How to execute the zero adjustment in LOW mode

How to execute the zero adjustment in LOW mode

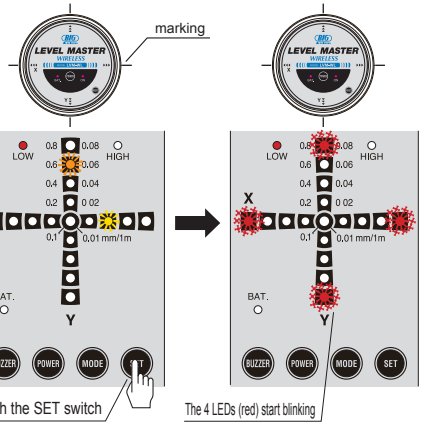

①Push the "SET" switch after 10 seconds.
The 4 external LEDs (red) start blinking.

Caution

When executing the "zero adjustment" in the LOW mode, adjust the level in order to obtain an inclination of the reference surface within 0.8 and then execute the "zero adjustment". It is not possible to execute the "zero adjustment" if the inclination exceeds 0.8.

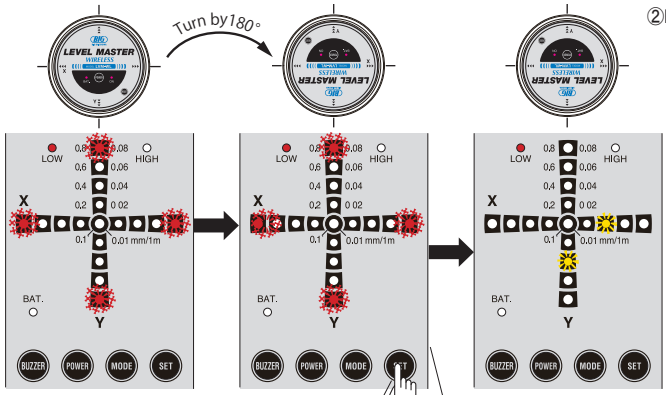

②Rotate the Body by 180° using as reference the markings on the reference surface.

Errors in the "zero adjustment" may occur if the device is not rotated correctly by 180°or if it is not aligned with the markings.

③Push again the "SET" switch after 10 seconds. The buzzer will emit a "Beep" to notify the completion of the "zero adjustment".

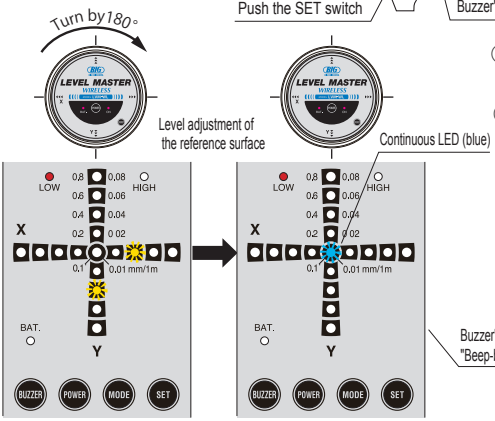

④Rotate the Body by 180° using .

⑤Adjust the level of the reference surface in order to obtain an inclination within 0.1 for both axes.

When the inclination of one of the axes is adjusted within 0.1, the LED (blue) turns on and the buzzer emits a sound [Beep, beep]. When the inclination of both axes is within 0.1, the LED (blue) turns on and the buzzer emits a sound [Beep-beep-beep].

Go to P6 →How to execute the zero adjustment in HIGH mode

How to execute the zero adjustment in HIGH mode

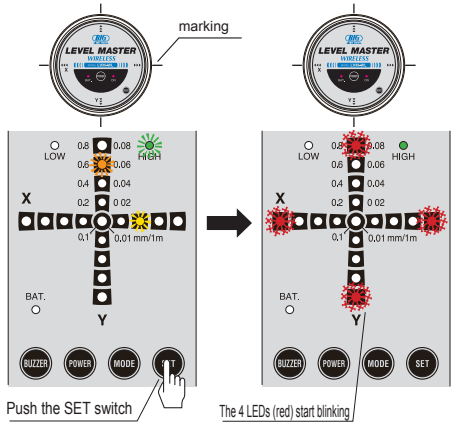

①Push the MODE switch to change to the HIGH mode.

②The levelling value of the X and Y axes is within 0.08 after switching to the HIGH mode.

③Push the "SET" switch after 10 seconds.
The 4 external LEDs (red) start blinking.

Caution
When executing the "zero adjustment" in the HIGH mode, adjust the level in order to obtain an inclination of the reference surface within 0.08 and then execute the "zero adjustment".
It is not possible to execute the "zero adjustment" if the inclination exceeds 0.08.

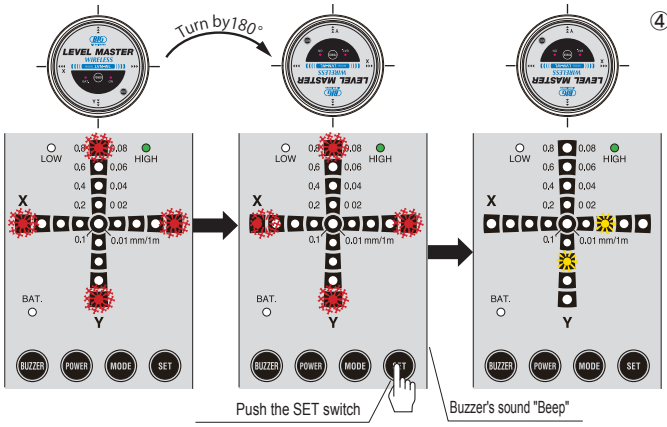

④Rotate the device by 180° using as reference the markings on the reference surface.

Errors in the "zero adjustment" may occur if the device is not rotated correctly by 180° or if it is not aligned with the markings.

③Push again the "SET" switch after 10 seconds. The buzzer will emit a "Beep" to notify the completion of the "zero adjustment".

Execute the levelling operation.

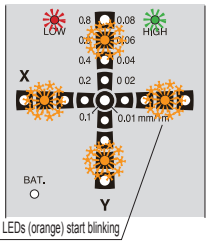

In case of executing the "zero adjustment" in the LOW mode:
◆ When the level exceeds 0.8
In case of executing the "zero adjustment" in the HIGH mode:
◆ When the level exceeds 0.08

In case of pushing the "SET" switch, turning the device by 180° and pushing again the "SET" switch in the above situations, the 4 orange LEDs of 0.6 (for the LOW mode) / 0.06 (for the HIGH mode) blink 4 times and at the same time the buzzer emit a "be-be-be-be" sound to notify that it is not possible to execute the setting operation.

5. OPERATIONS

5-1. Levelling operation

①Remove oil, dirt, notches and marks from the machine table's surface and from the base of the device.

②Place the device carefully on the reference surface parallel to the X and Y axes.

③Push the POWER switch to turn ON the power of Body/Receiver.

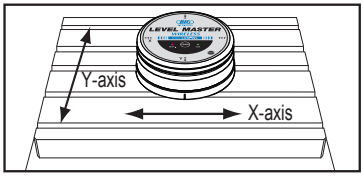

④When power of the receiver is turned ON, LOW mode (inclination: 0.1mm - 0.8mm) is selected.
If the LED (red) in the 0.08. position blinks, inclination exceeds 0.8.

⑤Adjust the level in order to turn on the LED (blue) of the central position. When the LED (blue) turns on, the inclination is within 0.1.
When the inclination of one of the axes is adjusted within 0.1, the LED (blue) turns on and the buzzer emits a sound [Beep, beep].
When the inclination of both axes is within 0.1, the LED (blue) turns on and the buzzer emits a sound [Beep-beep-beep].

⑥Push the MODE switch to change to the HIGH mode.

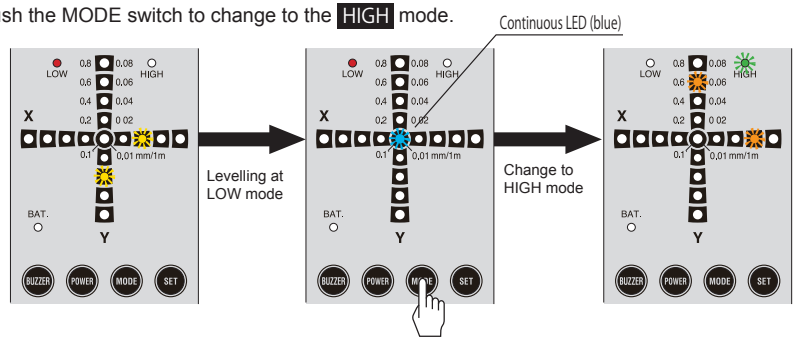

⑦Adjust the level in order to turn on the LED (blue) of the central position.
When the inclination of one of the axes is adjusted within 0.01, the LED (blue) turns on and the buzzer emits a sound [Beep, beep]. When the inclination of both axes is within 0.01, the LED (blue) turns on and the buzzer emits a sound [Beep-beep-beep].

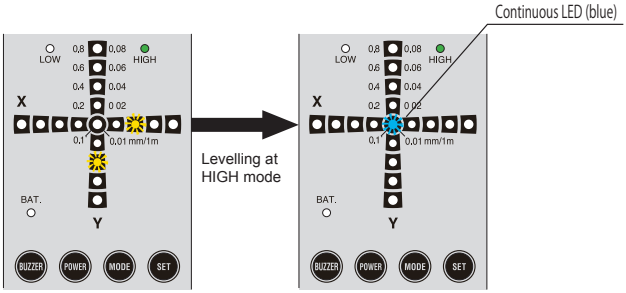

5-2. How to turn on/off the buzzer 《Receiver》

When the inclination is within 0.01(HIGH mode) or within 0.1 LOW mode), the LED (blue) turns on and the buzzer emits a sound. It is possible to turn on/off the buzzer's sound by using the switch of the device.

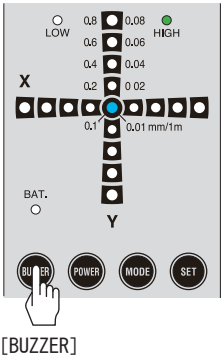

5-3. How to reset the device to its default values 《Receiver》

To reset the device to its default values (delivery condition), push the "SET" switch while turning ON the power. The internal data are cleared.

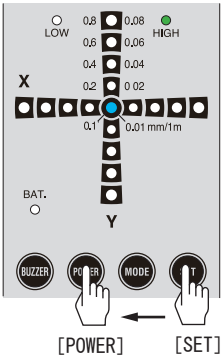

6. SAFETY NOTES

- Use a plate with good surface flatness to be sure to obtain a level within 0.01.
- Since the diameter of the LEVEL MASTER WIRELESS is ϕ109mm, if only 2μ of dirt get caught by the device, a distortion of 0.018mm for 1m will be generated.
- This device (Body/Receiver) is a precision instrument. Do not drop it or cause shocks to it. Also, after the use, always apply antirust oil to its base and store it using the exclusive storage case.
- When storing the device (Body/Receiver) , store it in an environment with a temperature between 0℃ and 40℃.
- Since the device is a precision instrument, do not apply coolant to it. Also, after the use, do not leave it on the machine table, plate or installation jig.
- Since the device (Body/Receiver) is a precision instrument, do not disassemble or modify the device. Otherwise, its efficiency or lifespan may worsen and the warranty annulled.
- Remove the batteries if the device is not used for a long period.
- If accuracy problems or malfunctions occur, stop using the device and send it to BIG using our distributors for inspections and repairs.

7. WARRANTY

Warranty period: 1 year from the delivery
However, the below situations are excluded from the warranty. ・If the device is subject to shocks or vibrations of 3G or more. ・If the device is intentionally disassembled. ・If damages and breakdowns are caused by unreasonable repairs or modifications or in case of utilization errors. ・If after the purchase, damages and breakdowns are caused by moving, transporting or dropping the product. ・In case of damages and breakdowns caused by fires, earthquakes, storms, floods, lightning, seawater or other natural disasters.

8. EMC INFORMATION

Class and Group Description of EN 55011
This is a group 1, class B product according to EN 55011. This means that this product does not generate and/or use intentionally radio-frequency energy, in the form of electromagnetic radiation, inductive and/or capacitive coupling, for the treatment of material or inspection / analysis purpose and that it is suitable for use in domestic establishments and in establishments directly connected to a low voltage power supply network which supplies buildings used for domestic purposes.

Note: Since this product is battery operated, this product is not connected to this low voltage power supply network.

Manufacturer Name : BIG DAISHOWA SEIKI CO LTD
Address : Nishiishikiricho 3-3-39, Higashiosakashi, Osaka, JAPAN

EU Name : BIG KAISER PRECISION TOOLING LTD.
Address : Glattalstrasse 516, 8153 Rümlang, Switzerland

BIG DAISHOWA SEIKI CO., LTD.

■EXPORT DEPT.
Takaramachi5-2,Higasiosakasi Osaka 579-8025 JAPAN
Phone:072-982-8277 Fax:072-982-8370

JQA-QM3913
FA Dept.

LVM-18052101